/

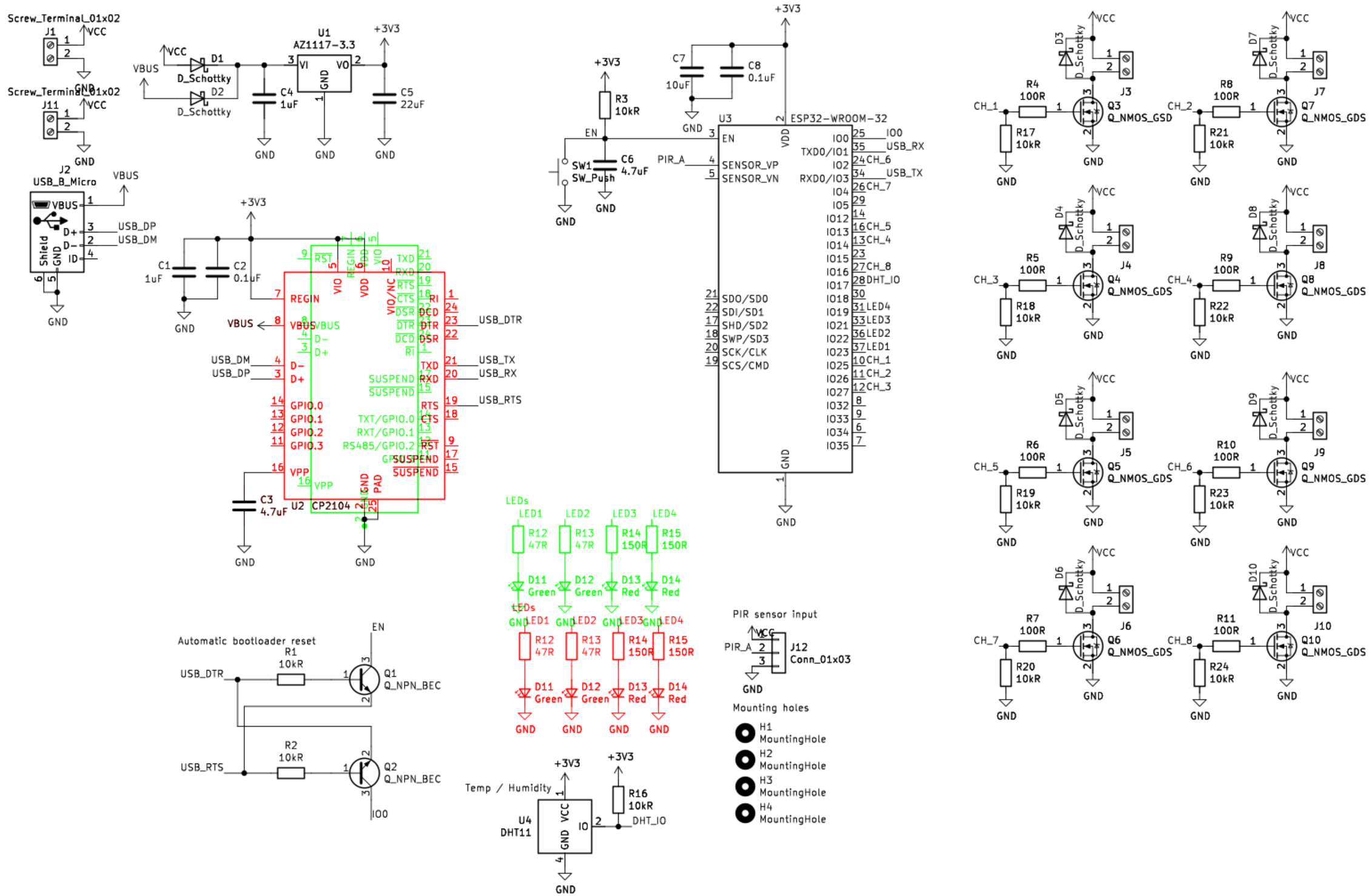
Screw_Terminal_01x02
J1
Screw_Terminal_01x02
J11
J2
USB_B_Micro
U1
AZ1117-3.3
D1
D_Schottky
D2
D_Schottky
C4
1uF
C5
22uF
C1
1uF
C2
0.1uF
C3
4.7uF
U2
CP2104
U3
ESP32-WROOM-32
C7
10uF
C8
0.1uF
R3
10kR
C6
4.7uF
SW1
SW_Push
PIR_A
Automatic bootloader reset
R1
10kR
Q1
Q_NPN_BEC
R2
10kR
Q2
Q_NPN_BEC
LEDs
LED1
LED2
LED3
LED4
R12
47R
R13
47R
R14
150R
R15
150R
D11
Green
D12
Green
D13
Red
D14
Red
Temp / Humidity
U4
DHT11
R16
10kR
PIR sensor input
J12
Conn_01x03
Mounting holes
H1
MountingHole
H2
MountingHole
H3
MountingHole
H4
MountingHole
R4
100R
R17
10kR
J3
Q3
Q_NMOS_GSD
R8
100R
R21
10kR
J7
Q7
Q_NMOS_GDS
R5
100R
R18
10kR
J4
Q4
Q_NMOS_GDS
R9
100R
R22
10kR
J8
Q8
Q_NMOS_GDS
R6
100R
R19
10kR
J5
Q5
Q_NMOS_GDS
R10
100R
R23
10kR
J9
Q9
Q_NMOS_GDS
R7
100R
R20
10kR
J6
Q6
Q_NMOS_GDS
R11
100R
R24
10kR
J10
Q10
Q_NMOS_GDS