/

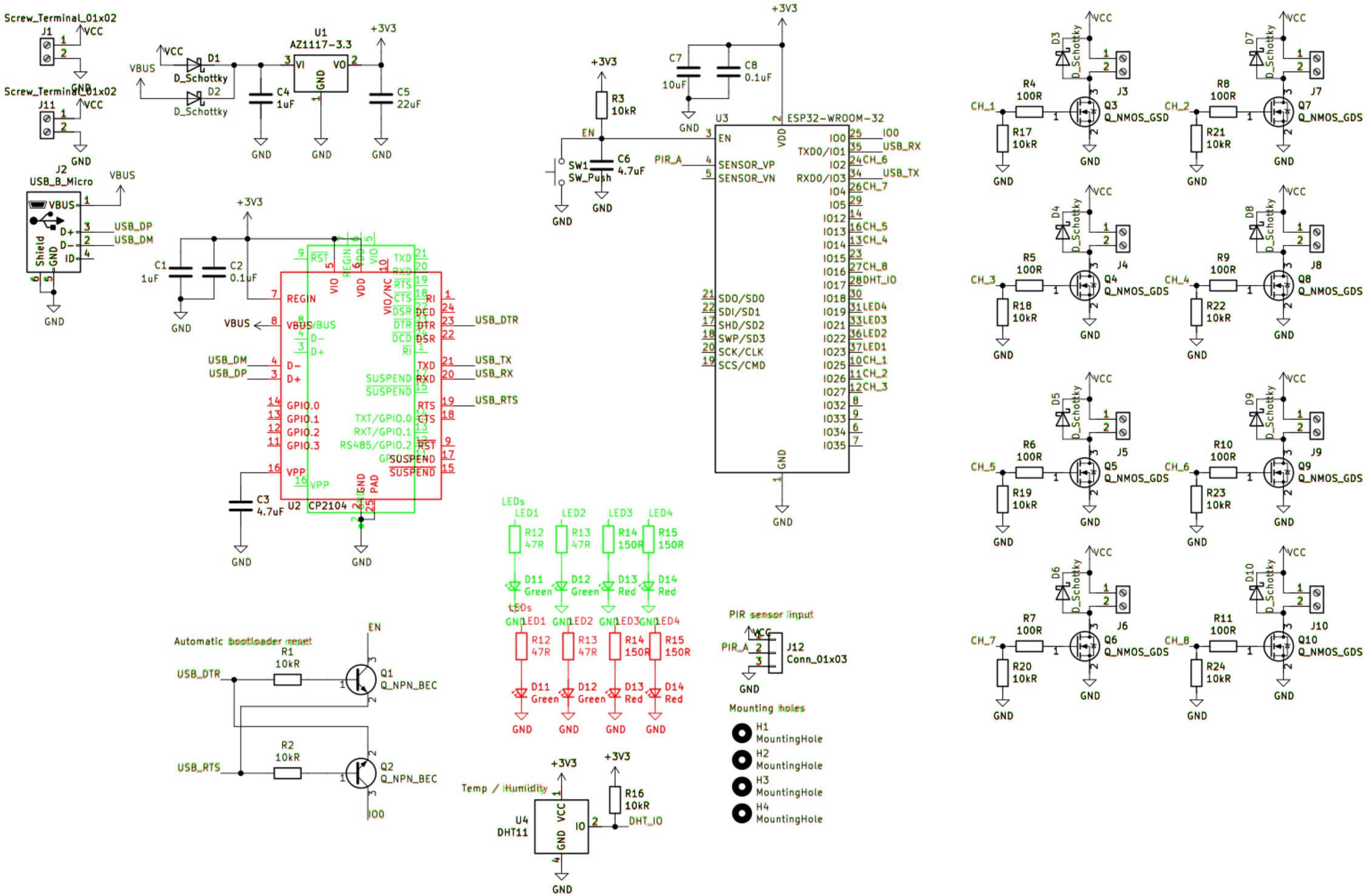
Screw_Terminal_01x02
J1
Screw_Terminal_01x02
J11
J2
USB_B_Micro
VBUS
USB_DP
USB_DM
D1
D_Schottky
D2
D_Schottky
U1
AZ1117-3.3
C4
1uF
C5
22uF
+3V3
GND
C1
1uF
C2
0.1uF
U2
CP2104
C3
4.7uF
USB_DTR
USB_TX
USB_RX
USB_RTS
U3
ESP32-WROOM-32
R3
10kR
C6
4.7uF
SW1
SW_Push
C7
10uF
C8
0.1uF
PIR_A
EN
LEDs
LED1
LED2
LED3
LED4
R12
47R
R13
47R
R14
150R
R15
150R
D11
Green
D12
Green
D13
Red
D14
Red
Automatic bootloader reset
R1
10kR
R2
10kR
Q1
Q_NPN_BEC
Q2
Q_NPN_BEC
IO0
Temp / Humidity
U4
DHT11
R16
10kR
DHT_IO
PIR sensor input
J12
Conn_01x03
Mounting holes
H1
MountingHole
H2
MountingHole
H3
MountingHole
H4
MountingHole
VCC
D3
D4
D5
D6
D7
D8
D9
D10
D_Schottky
R4
100R
R5
100R
R6
100R
R7
100R
R8
100R
R9
100R
R10
100R
R11
100R
R17
10kR
R18
10kR
R19
10kR
R20
10kR
R21
10kR
R22
10kR
R23
10kR
R24
10kR
CH_1
CH_2
CH_3
CH_4
CH_5
CH_6
CH_7
CH_8
J3
J4
J5
J6
J7
J8
J9
J10
Q3
Q4
Q5
Q6
Q7
Q8
Q9
Q10
Q_NMOS_GSD
Q_NMOS_GDS